ropeline

HARDWARE FOR UHMWPE ROPES

BLUE WAVE®

Blue Wave Rigging Hardware

In business since 1932, Danish based Blue Wave A/S is today among the leading manufacturers of high quality stainless steel rigging hardware. Focus has for years been on Marine, Architectural and Industrial sectors.

By constant development and investments in high tech production machinery, focus on customer needs and wishes, a well known brand name has been established.

Key factor and future aim, is continued development backed by customer commitment and driven by market demand.

Applying efficient production, good design, low weight and optimal strength to its products Blue Wave strives to become the number one chosen supplier of rigging hardware.

Product information and contact

Manufactured to the highest quality mterials and tested in their design and performance, Blue Wave components are used for marine and structural rigging around the world.

You are kindly requested to contact your local Blue Wave dealer/distributor, or Blue Wave direct, should you have any questions or need further documentation.

Blue Wave A/S
H.C. Oerstedsvej 2
DK 6100 Haderslev
Denmark
Mail: bluewave@bluewave.dk
Homepage: www.bluewave.dk
Phone: + 45 73 22 14 14
Fax: + 45 73 22 14 24

Blue Wave Australia & NZ Pty Ltd
Unit 10, 17A Ern Harley Drive
4220 Burleigh Heads Qld
Australia
Mail: bwa@bluewaveaus.com
Homepage: www.bluewave.com
Phone: + 61(0)755938178
Fax: +61(0)755937365

INDEX

Blue Wave rigging hardware and contact	1
The Blue Wave ropeline	2
Rope fittings	3 - 4
Rope riggingscrews and T-ends	5
Welded rope fittings	6
Guard rail fittings	7
Thimbles	7 - 9
Tools for sail thimble and ropebone	9
Rope and end fitting - keep it simple	10

Dyneema® or Ultra-high-molecular-weight polyethylene (UHMWPE, UHMW) ropes have the advantage of a ultra high strength versus weight while being highly flexible.

As an alternative to e.g. stainless steel wires, the synthetic fiber ropes used in various applications feature a significant advantage compared to traditional materials and have opened a new field of possibilities and features in rigging.

The Blue Wave RopeLine

Being a world leading manufacturer in the field of end fittings for wire and rod rigging, Blue Wave has now also developed a range of end fittings for fiber ropes like Dyneema®

Materials used are Stainless Steel AISI316 and marine grade aluminium.

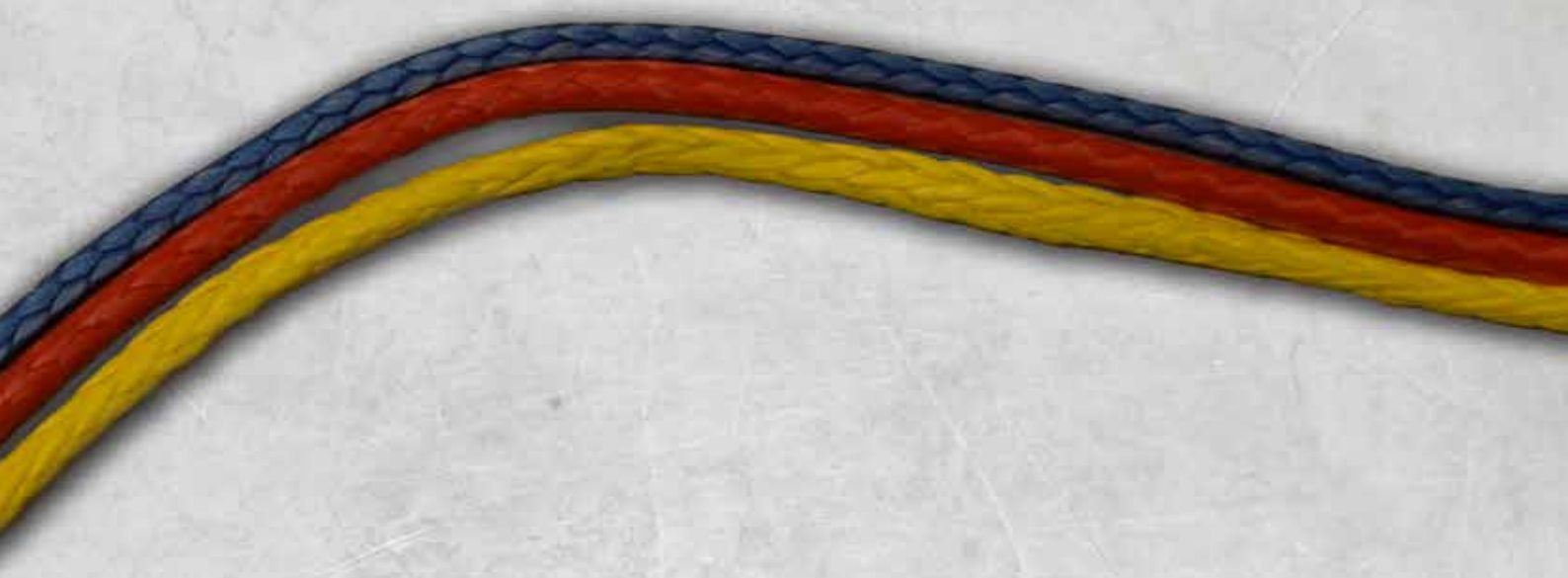

Standard hardware solutions amongst others include:

- Eyes
- Forks
- Ball Ends
- Threaded Studs
- Turnbuckles for integration
- T-Ends
- Swage Fitting Connections
- Heavy Duty Thimbles
- Reinforced Thimbles

Copyright Gleistein Ropes

All fittings are engineered and tested to break loads stated in the technical schemes and guarantees safe and reliable performance.

Correct attachment
When terminating high modulus fiber like Dyneema® rope a knot for example can reduce the ropes strength by up to 60% and will seat and slip under load.

All Blue Wave end fittings are made for and tested with spliced rope attachment.

For correct attachment/splicing contact your local rigger.

Safe working loads
Blue Wave recommends that safe work loads should not to exceed one fifth (1/5) of the break loads listed.

Dyneema® is a registered trademark of DSM

ROPE FITTINGS

ROPE TERMINAL

High Polished Stainless Steel - AISI 316

ART. NO.	Rope Size	A	D1	D2	KW	L1	L2	BL/KG	KG/100
RP820804	4	5	16	8,5	11	45	12	1900	3,8
RP821005	5	6	21	10,5	16	58,5	14,5	3200	8,5
RP821206	6	9	25	13	19	71	17,5	5500	15,5
RP821408	8	10	39	14,5	29	103,5	29,5	9400	47,2
RP821610	10	13	45	16,2	33	120	34	15000	75,5
RP821912	12	15	54	19,5	40	136,5	38	18000	117,1
RP822214	14	18	65	23	47	163	42	26000	207,5
RP822516	16	20	75	26	55	192	58	32000	302,2

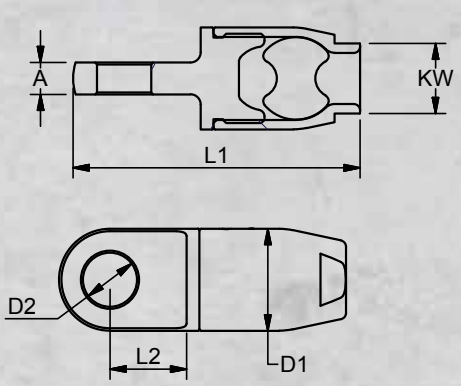

Blue Wave's rope fittings are made from high quality stainless steel with eye-catching design and solid construction. Opens wide opportunities for use with rope from Ø4-16mm.

PATENT PENDING

No. 16171384.7-1751

ROPE TERMINAL

Polished and Anodized Aluminium *Low Weight*

ART. NO.	Rope Size	A	D1	D2	KW	L1	L2	BL/KG	KG/100
RA820804	4	5	16	8,5	11	45	12	1900	1,27
RA821005	5	6	21	10,5	16	58,5	14,5	3200	2,85
RA821206	6	9	25	13	19	71	17,5	5500	5,19
RA821408	8	10	39	14,5	29	103,5	29,5	9400	15,81
RA821610	10	13	45	16,2	33	120	34	15000	25,29
RA821912	12	15	54	19,5	40	136,5	38	18000	39,23
RA822214	14	18	65	23	47	163	42	26000	69,51
RA822516	16	20	75	26	55	192	58	32000	101,24

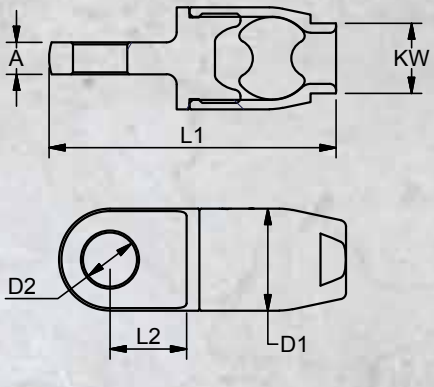

PATENT PENDING

No. 16171384.7-1751

ROPE FORK TERMINAL

High Polished Stainless Steel - AISI 316

Art.No.	Rope Size	PIN	A	B	C	D	KW	L	BL/KG	KG/100
RP840804	4	8	6,5	16	9	16	11	53	1900	6,4
RP841005	5	9,5	9	21	11	21	16	63	3200	10,3
RP841206	6	12,7	11	26	13,5	25	19	80	5500	17,2
RP841608	8	16	14	32	17	39	29	108	8000	39,4
RP841910	10	19	18	35	21	45	33	129	11000	67,8

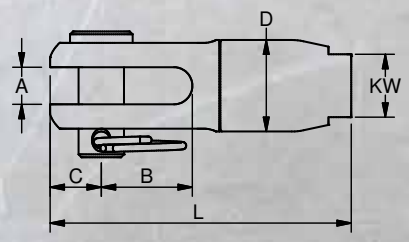

PATENT PENDING

No. 16171384.7-1751

ROPE FITTINGS

ROPE BALL TERMINAL

High Polished Stainless Steel - AISI 316

Art.No.	Rope Size	D1	D2	D3	G	L1	L2	BL/KG	KG/100
RP621404	4	7.5	16	14.6	5/16	60	19	1900	5.2
RP621604	4	7.5	16	16	5/16	60	19	1900	5.4
RP621904	4	9	16	19	3/8	60	18	1900	6.5
RP621405	5	9	21	14.6	3/8	66	18	3200	9.4
RP621905	5	9	21	19	3/8	68	18	3200	10.2
RP622005	5	12.6	21	20	1/2	70	19	3200	11.8
RP622105	5	12.6	21	21.3	1/2	70	19	3200	12.1
RP622006	6	12.6	25	20	1/2	76	20	5500	17.1
RP622106	6	12.6	25	21.3	1/2	76	19	5500	17.4
RP622606	6	14.2	25	26.5	9/16	88	23	5500	21.9
RP622608	8	16	39	26.3	5/8	119	31	8250	57.0
RP622708	8	17.8	39	27.5	3/4	120	31	9400	58.9

10mm - 12mm only on request.

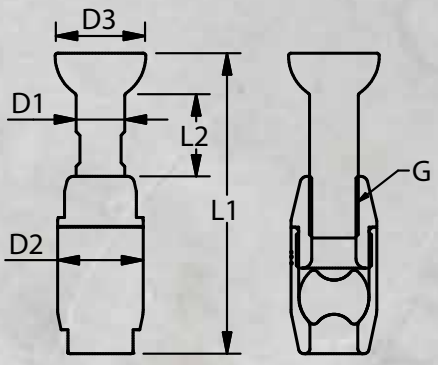

PATENT PENDING

No. 16171384.7-1751

ROPE T-TERMINAL

High Polished Stainless Steel - AISI 316

Art.No.	Rope Size	D	T	L1	KW	BL/KG	KG/100
RP867504	4	16	7,5	66	11	1500	5,3
RP860904	4	16	9	72	11	1900	6,6
RP860905	5	21	9	82	16	2800	10,1
RP861205	5	21	12,6	97	16	3200	15,8
RP861206	6	25	12,6	109	19	5000	21,9
RP861406	6	25	14,2	115	19	5500	25,3
RP861608	8	39	16	151	29	8000	61,2
RP861808	8	39	17,8	154	29	9400	67,3

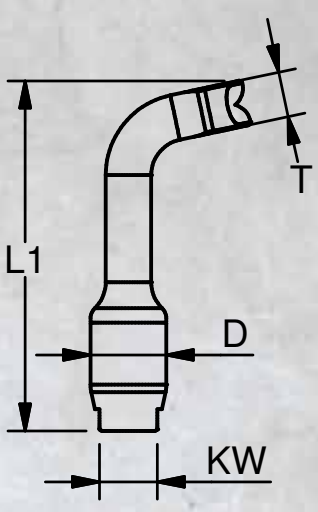

PATENT PENDING

No. 16171384.7-1751

ROPE THREAD TERMINAL

High Polished Stainless Steel - AISI 316

Art.No.	Rope Size	G	D	L1	L2	BL/KG	KG/100
RP800406A	4	1/4"	16	87	48	1300	5,1
RP800408A	4	5/16"	16	95	57	1900	6,2
RP800508A	5	5/16"	21	106	57	2200	10,7
RP800510A	5	3/8"	21	111	63	3200	12,1
RP800610A	6	3/8"	25	122	63	2850	18,2
RP800611A	6	7/16"	25	126	68	3850	20,1
RP800812A	8	1/2"	39	163	80	5150	55,9
RP800816A	8	5/8"	39	182	100	8250	64,5
RP801020A	10	3/4"	45	216	120	12050	102,8

Larger sizes on request.

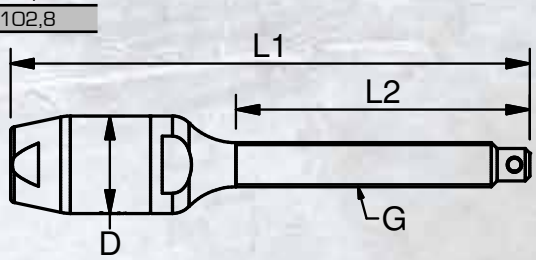

PATENT PENDING

No. 16171384.7-1751

ROPE RIGGING SCREWS AND T-ENDS

ROPE RIGGING SCREW

High Polished Stainless Steel - AISI 316

ART. NO.	THREAD G	ROPE	PIN	A	B	D	L1	L2	R	T	BL/KG	KG/100	PACK
331906AF	1/4"	3mm	6,35	8	17	7,5	215	155	2,5	5	1300	11,2	10
331908AF	5/16"	4mm	8	10	20	9,5	267	191	4	8	2200	20,2	10
331910AF	3/8"	5mm	9,5	12	26	13,5	307	225	5	12	3400	35,3	10
331911AF	7/16"	6mm	11,1	15	28	13,5	342	254	5	12	4600	53	10
331912AF	1/2"	7mm	12,7	18	35	17,5	380	276	7	16	6100	78,6	BULK
331916AF	5/8"	8mm	16	20	41	17,5	478	342	7	16	9900	133,5	BULK

The Blue Wave Chromed Bronze Body riggingscrew features a number of details that makes it the best choice for exclusive and durable rigging. The sleek, open Bronze body prevents the threads from seizing up, they are delivered with laser engraved thread size, Blue Wave logo, and side marking of the left thread.

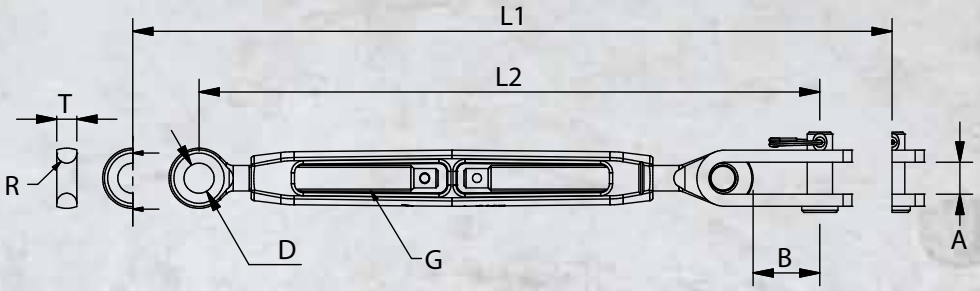

WELDED T-ROPE EYE

High Polished Stainless Steel - AISI 316

ART.NO.	ROPE SIZE	B1	B2	D	L1	L2	T	BL/KG	KG/100	PACK
616506	3	27	15	6,35	81,5	26,0	6,3	800	3,8	BULK
616507	4	27,00	15	7,50	85,0	26,0	7,50	1800	4,1	BULK
616509	5	38,00	22,0	9,00	99,5	34,0	9,00	2800	8,7	BULK
616512	6	38	22,0	12,58	109,0	34,0	12,58	4100	10,2	BULK

Note: All break loads are determined by ring & terminal

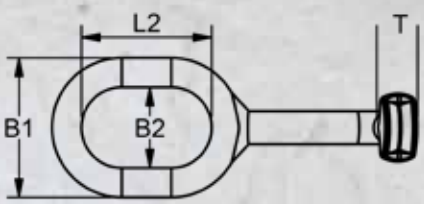

FORGED T-ROPE EYE

High Polished Stainless Steel - AISI 316

ART. NO.	ROPE	A1	A2	D1	D2	D3	R	FITS IN ART NO.	KG/100	PACK
616506F	Ø3	5	6,35	7,5	15	6,35	2,5	616103	1,4	10
616508F	Ø4	8	9	9,5	18,5	9	4	616105	3,9	10
616512F	Ø5-Ø6	12	14	13,5	29	14	5	616107	12,1	10
616516F	Ø7-Ø8	16	18	17,5	35,5	18	7	616110	27	10

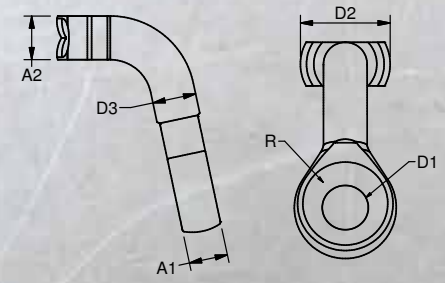

WELDED ROPE FITTINGS

T-TERMINAL W. EYE / TRAPEZE T

High Polished Stainless Steel - AISI 316

ART. NO.	WIRE	B	D1	D2	D3	L1	L2	L3	T	KG/100	PACK
610025LRT	2,5 - 3/32"	15	5,5	8	18	83	32	31	6,3	2,7	20
610003LRT	3 - 1/8"	15	6,35	8	18	88	38	31	6,3	3,0	20
610025RT	2,5 - 3/32"	15	5,5	8	18	83	32	31	6,3	2,4	20
610003RT	3 - 1/8"	15	6,35	8	18	88	38	31	6,3	2,7	20
610025LT	2,5 - 3/32"	15	5,5	8	18	83	32	31	6,3	2,4	20
610003LT	3 - 1/8"	15	6,35	8	18	88	38	31	6,3	2,7	20

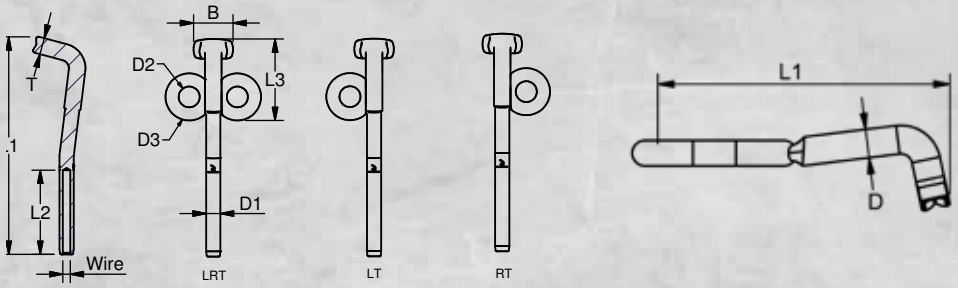

ROPE TERMINAL

High Polished Stainless Steel - AISI 316

ART.NO.	WIRE SIZE	L1	L2	L3	L4	L5	D1	D2	D3	BL/KG	KG/100	PACK
651025	2,5	83	26	27,2	32	15	5,5	2,8	6	800	2,6	BULK
651003	3,0	90	26	27,2	38	15	6,35	3,5	6	1300	2,9	BULK
651004	4,0	96	26	27,2	45	15	7,5	4,4	6	2600	3,4	BULK

Note: All break loads are determined by ring & terminal

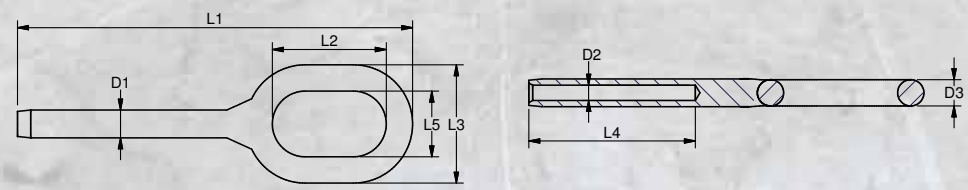

GUARD RAIL FITTINGS - ROPE TERMINAL

High Polished Stainless Steel - AISI 316

ART. NO.	WIRE	THREAD G	L1	L2	L3	D1	D3	BL/KG	KG/100	PACK
650003	3,0 1/8"	5/16"	60	38	10	6,35	26	1300	3,9	20
650004	4,0 5/32"	5/16"	68	45	11	7,5	26	1700	4,2	20
650005	5,0 3/16"	5/16"	76	51	11	9,0	26	2200	4,9	20

The user is responsible for choosing the proper cable diameter and for correct assembly.

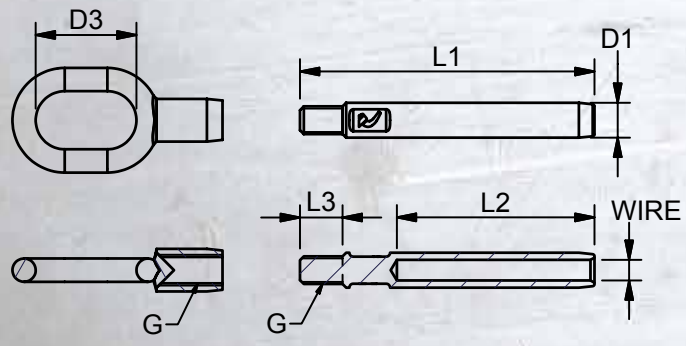

GUARD RAIL FITTINGS

ROPE FORK TERMINAL

High Polished Stainless Steel - AISI 316

Art.No.	Rope Size	PIN	A	B	C	D	KW	L	BL/KG	KG/100
RP840804	4	8	6,5	16	9	16	11	53	1900	6,4

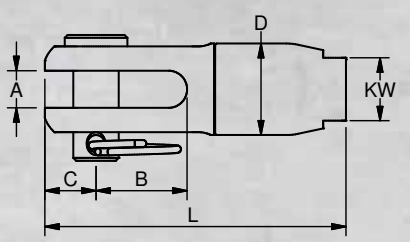

PATENT PENDING

No. 16171384.7-1751

RIGGING SCREW W. INTEGRATED ROPE TERMINAL

High Polished Stainless Steel - AISI 316 - Chromed Bronze Body

ART.NO.	THREAD G	ROPE	PIN	A	B	L1	L2	BL/KG	KG/100
RP130408A	5/16"	4 mm	8	7	16	261	187	1700	76,1

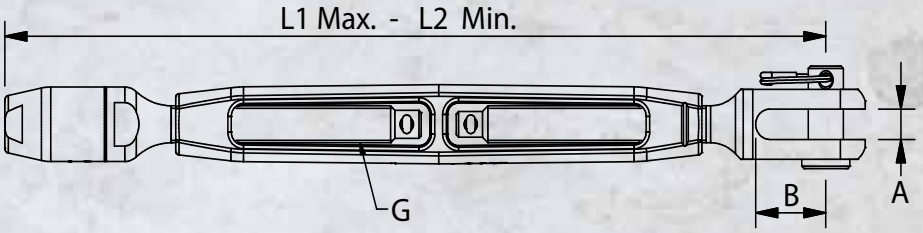

WHEEL THIMBLE

High Polished Stainless Steel - AISI 316

Art.No.	Rope Size	D2	D1	D3	L	BL/KG	KG/100
RP1105	3	5	3,5	15,5	7,3	0,5	5
RP1106	4	6	6,5	17,5	9,2	0,8	5
RP1108	5	7	8,3	21,5	10,8	1,3	5
RP1110	6	8	10,3	25,5	12,8	2,2	5

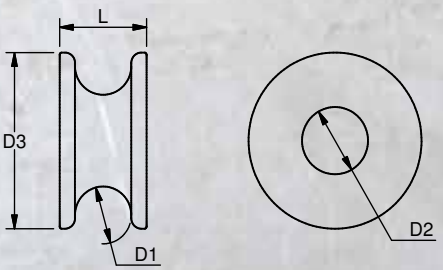

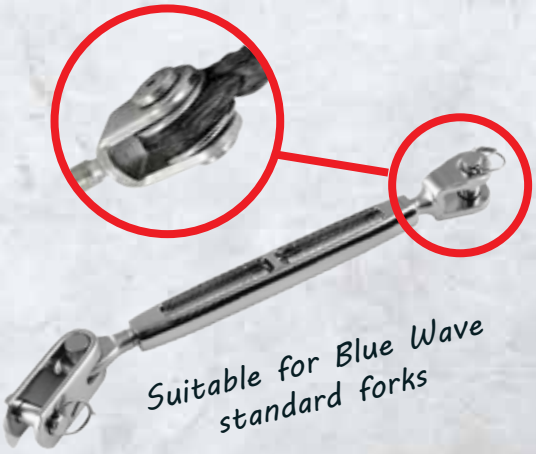

Suitable for Blue Wave standard forks

Rope fittings for Gatehook available on request

THIMBLES

The thimbles from Blue Wave are known worldwide for supreme quality and are often the first choice for the harsh environment of the marine sector.

THIMBLES WELDED

Polished Stainless Steel - **AISI 316**

ART. NO.	Ø	A	B	L	S	KG/100	PACK
119908	6	9	22	22	2	2,9	25
119909	6	10	24	24	2	3,2	25
119910	8	11	27	27	3	5,9	25
119912	8	14	29	29	3	6,3	25
119914	10	16	32	32	3	12,3	10
119916	10	18	40	40	3	13,6	10
119918	12	20	45	45	4	24,0	10

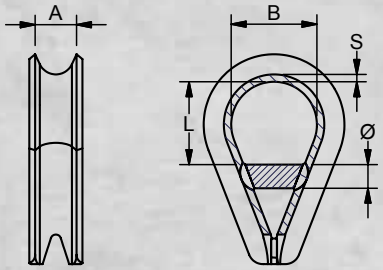

The reinforced thimble is based on the standard thimble but extra force is attained by the addition of a welded bar, as well as the ends of the thimbles being welded together.

Copyright Gleistein Ropes

THIMBLES

Polished Stainless Steel - AISI 316

ART. NO.	A	B	L	S	KG/100	PACK
110002	3	9	16	1,00	0,2	100,0
110003	4	10	17	1,00	0,3	100,0
110004	5	11	19	1,35	0,5	100,0
110005	6	13	21	1,20	0,7	100,0
110006	7	15	27	1,50	1,1	100,0
110007	8	19	33	1,50	1,4	100,0
110008	9	22	38	2,00	2,6	50,0
110009	10	24	43	2,00	3,1	50,0
110010	11	27	46	2,70	4,9	BULK
110012	14	29	52	2,70	6,6	BULK
110014	16	33	57	3,00	9,0	BULK
110016	18	40	67	3,00	11,3	BULK
110018	20	45	75	4,00	19,0	BULK
110020	22	52	84	4,00	31,2	BULK
110022	24	56	93	5,00	45,5	BULK
110026	28	65	112	6,00	67,0	BULK
110028	30	80	135	5,50	82,0	BULK
110032	34	92	160	6,25	110,0	BULK
110034	36	105	160	6,00	117,0	BULK
110036	38	115	176	6,00	142,0	BULK
110038	40	120	180	8,00	206,0	BULK
110040	42	120	192	8,00	220,0	BULK
110042	45	150	240	8,00	304,0	BULK

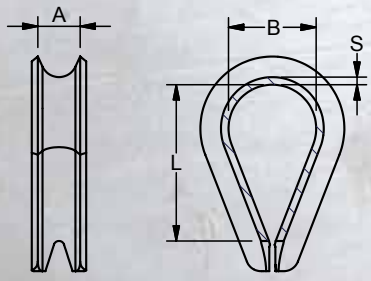

Copyright Gleistein Ropes

TOOLS FOR SAIL THIMBLE AND ROPEBONE

SAIL THIMBLE

ART. NO.	D1	D2	L1	PACK	KG/100
111415	14	16	16,0	10	0,5
111419	14	16	19,0	10	0,7
112016	20	22	16,0	10	0,8
112019	20	22	19,0	10	1,0
112022	20	22	22,0	10	1,1
112026	20	22	26,5	10	1,4

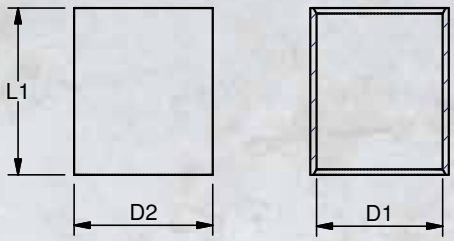

PRESSING TOOL FOR SAIL THIMBLE

ART. NO.	D1	D2	L	KG
RIGTOOL14	35	10	35	0,7
RIGTOOL20	42	14	40	0,7

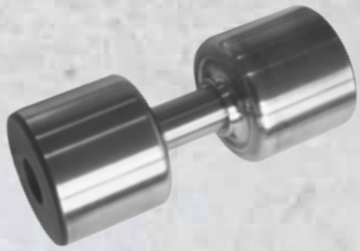

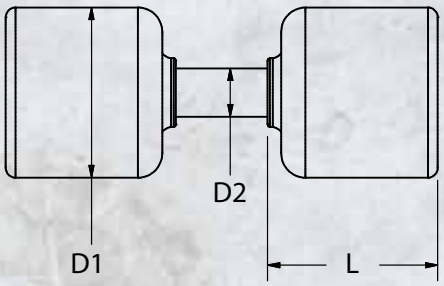

ROPEBONE

High Polished Stainless Steel - AISI 316

Art.No.	Rope Size	L	D1	Ø
RP0608	3 mm	36	8	3
RP0610	3 - 5 mm	45	10	4
RP0612	5 - 7 mm	52	13	4

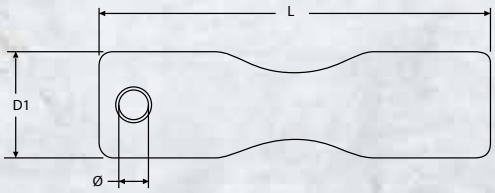

ROPE END FITTING

- New innovative product
- More opportunities to benefit from Dyneema® rope
- Unique slim and eye catching design
- Easy and viable to use and assemble
- 100 % AISI316 high quality stainless steel
- Easy to fit to existing rigging screws and deck fittings and backed by a full range of high quality rigging hardware

"KEEP IT SIMPLE"

House Bone Eye

1

Slide the housing over the rope

2

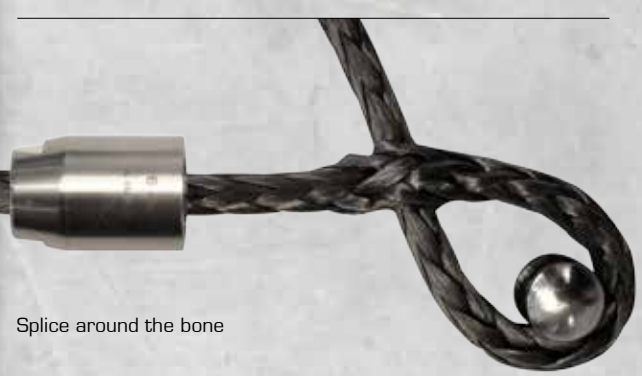

Splice around the bone

3

Pull spliced bone back in housing

4

Screw the parts together - threads can be locked with Loctite

www.bluewave.dk

Blue Wave reserves the right without notification, to change specifications and descriptions contained in the **ropeline** catalogue. 2017 - 1 edt.